TOP

BEE-1012 PAY-IFB ASSEMBLY FILE

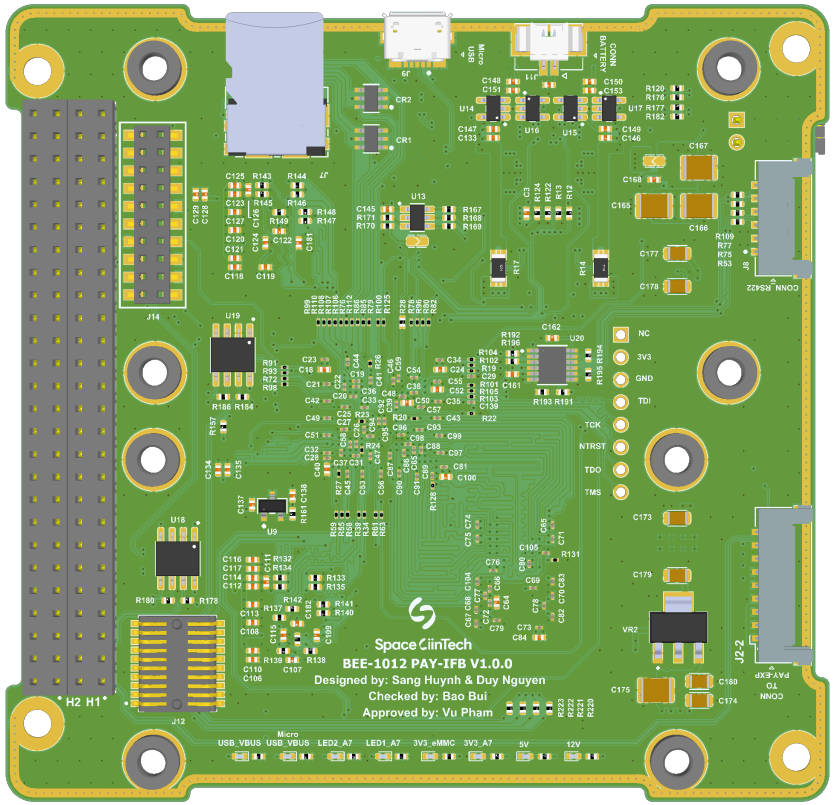

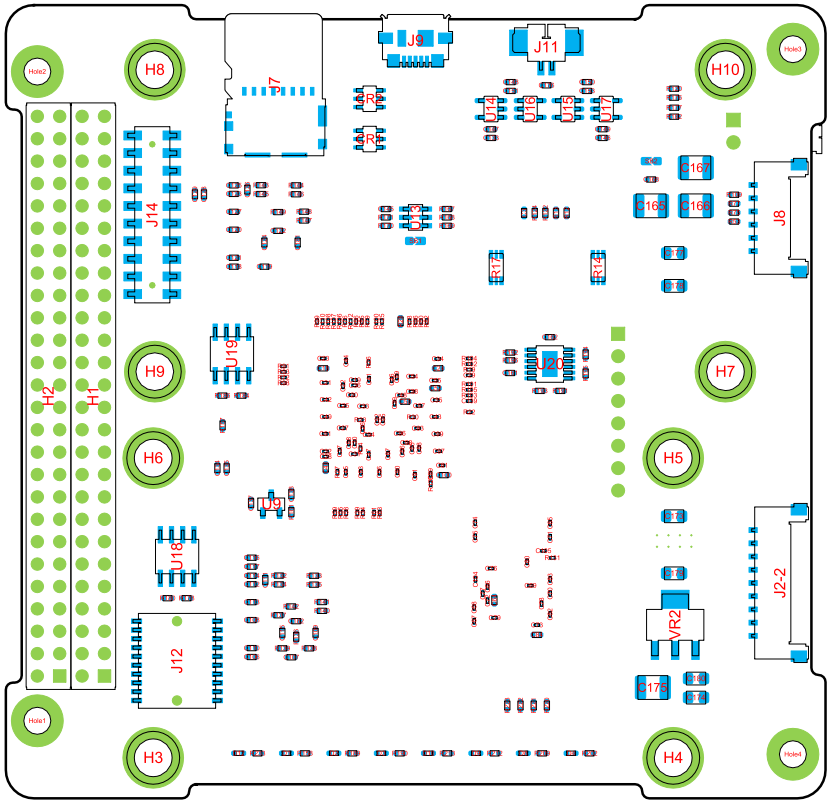

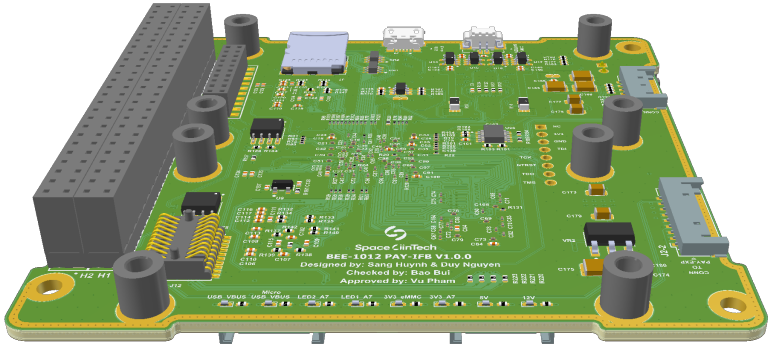

Project: BEE-1012	Sub-system: SATELLITE_IFB	
Design by: SANG HUYNH	Sheet title: BEE-1012 PAY-IFB V1.0.0 PCB Dwg	Sheet: 2 of 2
Checked by: BAO BUI	Document No: 1	Size: A3
Approved by: VU PHAM	Revision:	Date: 2/11/2026

BOTTOM

BEE-1012 PAY-IFB ASSEMBLY FILE

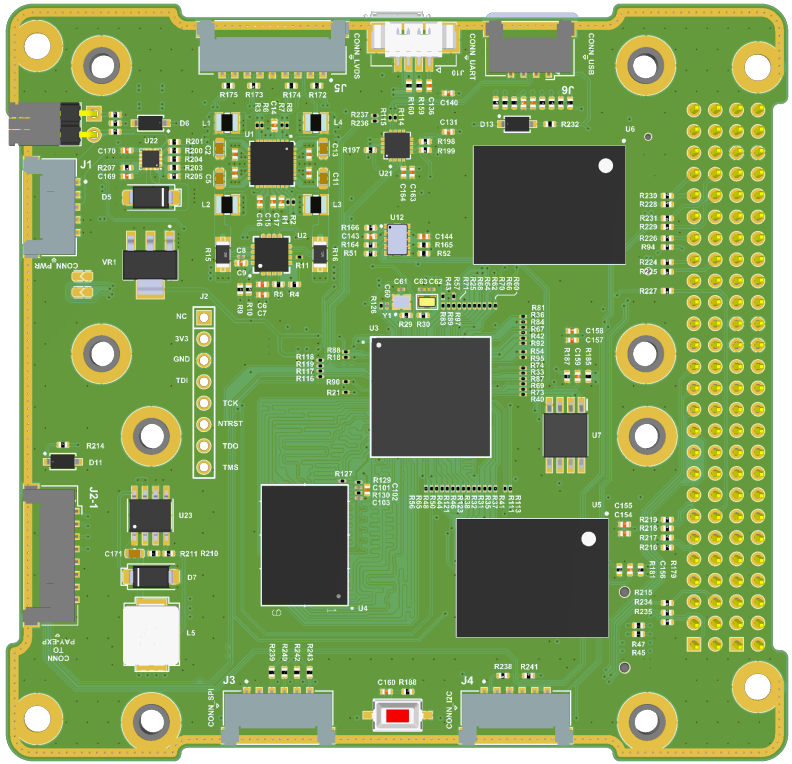

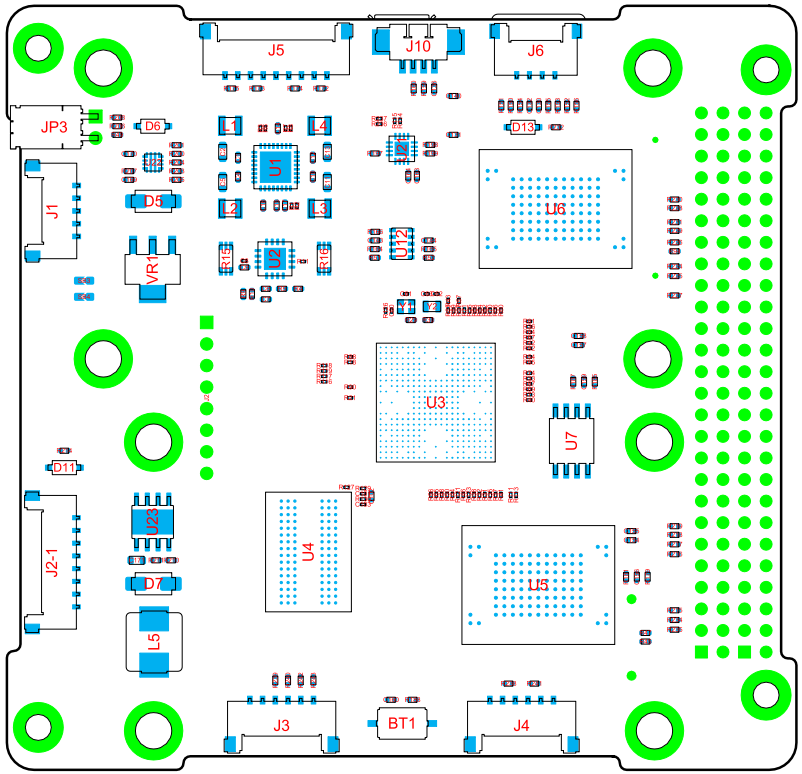

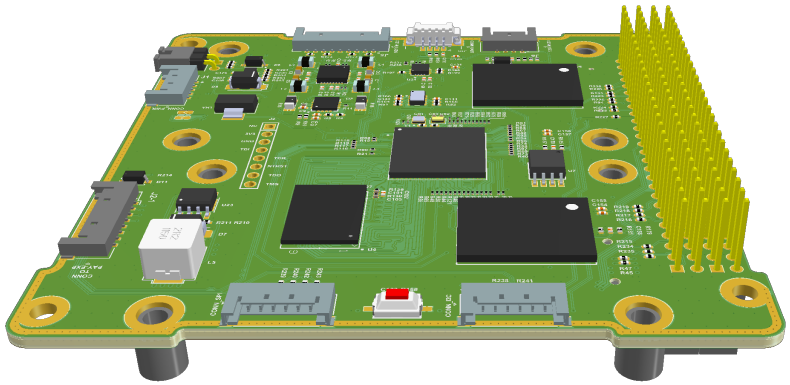

Project: BEE-1012	Sub-system: SATELLITE_IFB	
Design by: SANG HUYNH	Sheet title: BEE-1012 PAY-IFB V1.0 PCB Dwg	Sheet: 2 of 2
Checked by: BAO BUI	Document No: 2	Size: A3
Approved by: VU PHAM	Revision:	Date: 2/11/2026